ASK 13
Flight Manual

ALEXANDER SCHLEICHER SEGELFLUGZEUGBAU

POPPENHAUSEN /RHÖN

Flight - and Maintenance - Manual

for the Glider

AS - K 13

Edition

This Handbook has to be carried on bord of the aircraft.

It belongs to the glider

AS - K 13

.....

Serial No. 13050.....

Manufacturer .....

.....

Holder DEVON & SOMERSET.....

...GLIDING CLUB.....

.....

AS - K 13 Flight Manual

Amendments

No.	Designation	Page	Date	Signature
I	TM Nr. 4	22	5.12.69	Schleicher
2	TN No. 5(opt.)	8	17.12.70	K.-W. Jahn
3	TN No. 12	annex	04.10.89	K.-W. Jahn
4	TN No. 14	annex	27.09.91	K.-W. Jahn
5	Empty weight	Balancing sheet	18.05.92	K.-W. Jahn
SUPPL. BGA 208	BGA MOD 2007/1 - EXTENDED WEIGHT OPS	WITH BALANCE SHEET	18.10.07	[illegible] 1/c/1232

1. Operating Limitations

Air speeds:

Max. speed	125	mph 108 kts
rough air	87	mph 75 kts
aero tow	87	mph 75 kts
auto and winch tow	62	mph 53 kts

Weights:

Empty weight	650	lbs
Max. weight	1060	lbs
Max. weight of non lifting parts	710	lbs

Kategory: 2 BVS

Limit load factor	
up	4,0
down	-2,0
Safety factor	2,0

Center of gravity position in flight:

Leveling means	Tangente to rib Nr. 3 horizontal.
Datum	wing leading edge rib 3
Max. forward	2,75 behind datum point
Max. rearward	9,7 " " "

Weak link in the tow cable:

Winch tow	max.	2350	lbs
	min.	1850	lbs
Aero tow	max.	1580	lbs
	min.	1060	lbs

2. Operating Directions:

Winch tow:

Max. tow speed is 62 mph.

Attention. In winch tow pulling the stick back means increase of speed. When lifting off ease the stick somewhat to overcome a light tentency to pitch up. Best attitude in climb is with stick normal. Winch tow on the belly hock only.

Aero tow

Max. towing speed is 87 mph. (75 kts)
For aero tow the nose hock is preferable.
Pull release till the stop.

Before every take off check canopy and airbrakes for complete locking.

Adjustment of the front rudder pedals.

Pull back the pedals with the heels and lock the adjusting link to the desired position. Adjusting is possible during flight too.

In flight:

The presented values are calculated. They are related to EAS. There has to be considered the position error, see Fig. 1.
The indicated air speed reading may drop to zero when the glider is slipping or skidding due to movement of the total pressure peak from the nose to the side.

Fig. 1.

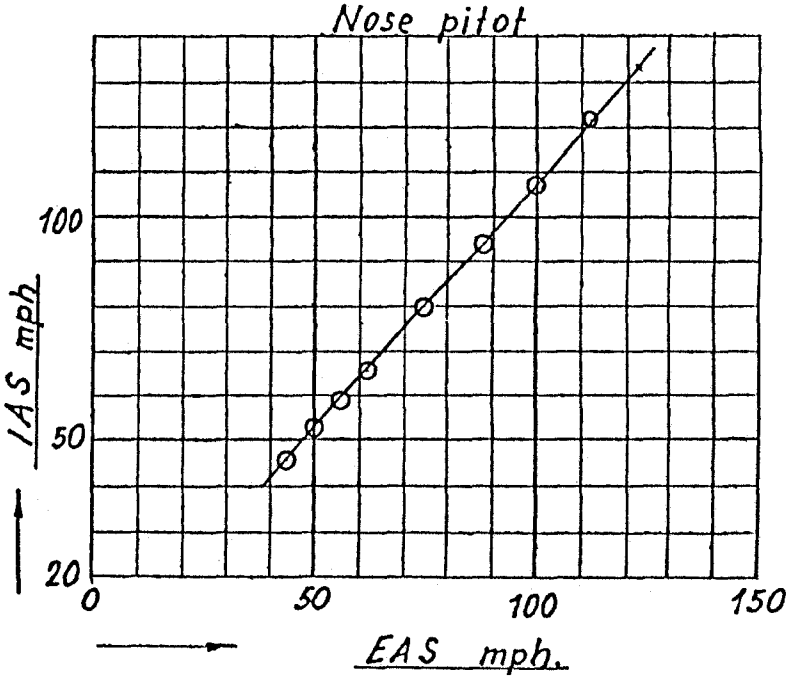

Stalling speed with an all up weight

of	840	lbs	is	35	mph	30	kts
	1040	lbs	is	38	mph	33	kts

Speed at	min	sink	40	mph	35	kts
	optim.	glide	50	mph	43	kts

Landing:

Approach speed 50 - 55 mph. (43-48 kts)
The glide angle can be adjusted in a wide range with the airbrakes. Touch down is best with partly extended airbrakes only. The wheel brake is actuated by the airbrake lever when fully pulled back.

Stalling and Spinning Behaviour:

With stick full back the aircraft can be controlled by the rudder. Applying a large amount of rudder will cause a spin. There has to be considered the influence of the center of gravity position to the spinning characteristics.
With the C.of Gr. pos. forward the aircraft will tend to go into a spiral dive and build up speed very rapidly. In this case the airbrakes have to be opened first before pulling out.

With C. of Gr. well in the middle spinning is normal and the aircraft will recover by giving free the controlls alone.

With C.of. Gr. near the most rear ward position spin recovery has to be managed by the following standard methode:

a) apply opposite rudder (i.e. against the direction of rotation of the spin);

b) pause ;

c) ease the control column forward until the rotation ceases

d) centralise rudder and allow aircraft to dive out.

At high speed there has to be watched the speed limits. When a speed of 87 mph is surpassed involuntary the airbrakes should be opened slowly.

Remember: At higher speeds the airbrake lever force is actuating in opening sense.

Rain drops, hoar frost and ice will disturb the wing surface, so quite adverse flying characteristics may result. There fore caution is advised in such cases. during approach, give enough speed margin.

Emergency Jettisoning of Canopy: To bail out the canopy has to be opened at the release knob at the left side and pushed forward out of the hinge. The hinges have to be watched for easy moveability.*

Cloud flying

The glider has sufficient strength for cloud flying. Nevertheless some principal rules should be considered:

* TN-no. 5 from 17.12.70:

"To bail out the canopy has to be opened by pulling both release knobs on left and right side."

1) Overspeed in cloud flying should be prevented in any case. There should be the rule to open the airbrakes early at speeds of 65 to 75 mph.

2) Minimum equipment for cloud flying:
Air speed indicator with pitot tube protected against icing.
Sensitive altimeter
Variometer
Compass
Turn and bank (power source insensitive against icing).
Chronometer
An artificiel horizon and accelerometer is recommended.

3) The ATC rules are to be observed.

4) <u>Minimum Equipment:</u>

Airspeed indicator ranging from 30 to 125 mph.

Altimeter
Safety belt and shoulder harness.
Back cushion if no parachute is carried (min. thickness 4 inch).
Balance - and data plate
Flight Manual.

5) <u>Adjusting Data:</u>

The adjusting and washout - angles as well as the control surface deflections are shown in the outline drawing.
At repairs care should be taken to observe the tolerances.
By the particular kinematics of the control mechanism the aileron deflection will be influenced by the elevator. With normal stick position the ailerons have to be normal.

With pushed and pulled stick the ailerons are some what zoomed.

The controls have stops:

Rudder control: Fixed stop at the lower hinge.

Aileron control: Fixed stop at two hard wood pieces down the front seat.

Elevator control: Backward - fixed stop at the front edge of the seat, forward - fixed stop at the ground board.

Airbrakes:

Backward: Adjustable stop at the horizontal pushrod, stops against the main bulkhead frame.
Forward: Fixed stop, cross shaft lever stops at a tube piece.

6) Weights and Center of Gravity Positions:

After repairs, after installing of additional equipment, after new painting etc. there should be watched that the empty weight center of gravity is within the limits. If necessary balance weights are to be installed.

Empty weight		616	638	660	682	705	lbs
center of gravity position	max.	21,45	21,06	20,68	20,3	20,0	
	min.	19,3	18,7	18,2	17,7	17,2	

behind datum point.

Leveling means: Tangente to rib 3 horizontal.

Datum: wing leading edge rib 3.

If the empty weight center of gravity is within the given limits it is verified that the in-flight center of gravity is correct provided the glider is properly loaded after the balance plate.

The center of gravity has an important effect to the gliders handling characteristics. Therefore one should pay attention to not exeed the given limits.

Too much backward position may become dangerous: Stalling and especially the spinning characteristics (flat spin) can be badly influenced. The elevator becomes more sensitive.

Too much forward position may detoriorate the performance and does not allow flying at maximum lift. (flare out when landing!).

The following ranges of flight position of. c.g. are tested:

a) max. forward position:
2,76 inches behind datum point.

b) max. aft position:
9,7 inches behind datum point.

6) <u>Balancing instructions:</u>

Cockpit load (Pilot + parchute).

single	occup.	front seat 143	-	220 lbs.
two	occup.	front seat 143	-	220 lbs.

Less load has to be completed with ballast on the seat (lead - or sand cushion).

<u>Notice:</u> If no parschute is carried a back cushion has to be used which has a compressed thickness of 4 inches.

Trim by weight

Fixing both standard trim weight (17 lbs) at the forward foot board will compensate for 22 lbs pilot weight.

7) Approved Versions:

1) Rigging:

1) Clean and grease bolts and holes.
2) First put in left wing from the side and put in rear bolt. Do not tilt fuselage.
3) Put in right wing as mentioned under 2.
4) Put in the tapered pins (first the lower one) and screw on the nut. By slight shaking the wing this can be done easier.
5) Secure the tapered pin with a safety needle. Secure the rear pins by the safety hooks.
6) Connect the aileron and airbrake linkages and secure by the safety needles.
7) Put on elevator, the front screw has to be fastened by the wrench.
There has to be watched that the bell crank is properly put into the pushrod counter - part. There is the danger of bending the push rod.
8) After the elevator has been put on the pushrod of the trim tab has to be connected to the tab bell crank by a pin, washer and safety pin. It is recommended to fix the push rod for transport.

2) Preflight Check

After rigging resp. daily befor the first flight:
Check all rigging connections for proper se - curing. Look for foreign bodies. Check the controls, airbrakes and the release hock for free movement.

It is recommended to check frequently the whole glider thoroughly. There have been found quite a lot of unsecured bolts and damage at such occasions. Use a flash light to look into every spot.

3) Derigging

Point 1 - 8 (Rigging) in reverse sequence. Grease all joints, danger of rust !

4) Road Transport

The design of a trailer is a special task and can not been talked here in all details. The firm of Schleicher will supply suitable drawings for trailers.
The wing is best supported at the spar root. The second support should have enough distance, best about 8 feet from wing tip. A sufficient wide aera at the supports is important.

The same considerations concerns to the fuselage. Fix points are the wheel, the fixing hole at the rear fuselage and the two welded in screw nuts on the side of the forward part of the fuselage.

Careful attention should be paid to prevent water coming into the interior of the wing and fuselage. The aileron and airbrake push rods in the fuselage should be fastened, best with a rubber strap.

5) Maintenance

Humity is the worst enemy of a wooden glider. Be careful to prevent water remaining in corners. On suspicion that water came into wings and fuselage, bring same into a dry room and turn every day. The glider is endangered especially on open trailers. In any case it must be taken care for that by covering the front part no splash water will touch the wing root.

Also by condensing water considerable quantities of humidity can enter the interior of the glider.

Strong sun irradiation will affect the finish by time, therefore the glider should not be exposed to the sun more than neceasary. The treatment of the finish with good waxes and polishing material will increase the durability and improve the surface, an important fact for performance. The advantages of the laminarprofil can only be achieved by a smooth surface.

Sealing of gaps with adhesive tape will also cause some gain of performance. However at the cockpit caution is necessary, when parachute bail out shall be possible.

Cleaning of the plexiglas canopy only with suitable cleaners. If not available use pure water. Soft cloth (gloves cloth). In no case rub with hard cloth dry on plexiglass.

Lubrication of bearings:

So far as possible, the ball bearings are covered and therefore need no special maintenance. Only the bearings at the wing root, where the rigging connections do not allow a suitable protection, must be cleaned with gasoline when dirty and greased again.

The control surface bearings are to be dismantled and greased at the annual overhauls.

Wheel: Tube pressure 35 psi.

The c.g. hock especially is exposed to dirt and needs often cleaning and ciling.

The tail skid shoe has to be soled from time to time by welding on a new steel plate. But it should be removed for this work to prevent burning the rubber block.

The pressure openings for the instruments at the fuselage are to be sealed with adhesive tape on transport or extended parking. During longer non-flying periods it is advisable to put the in - struments completely out and store it in a dry room. When installing again watch correct connecting of the tubes.

The safety belts are to be checked currently for fractures, damp-stain and corrosion.

6) Overhauls

The tow hock has to be removed every 2000 launches or 2 years and sent back to the manufacturer for overhaul.
The rudder cables are to be replaced if there are any signs of worth mentioning wear.

7) Repairs

All major repairs should be made in the manufacturing firm. In cases of doubt please ask the Schleicher firm.

8) Appendix

3 - View drawing
Balancing sheet.

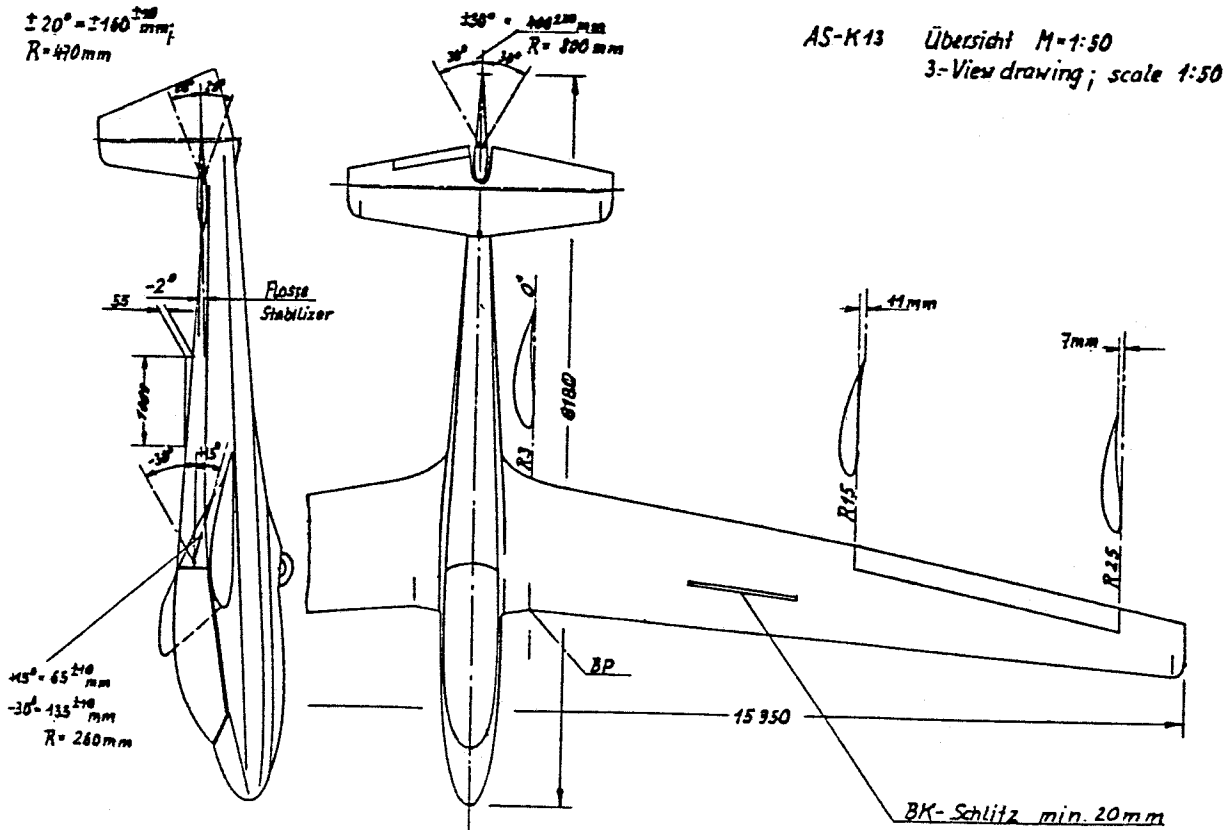
AS-K13 Übersicht M=1:50
3-View drawing; scale 1:50
±20° = ±160 +10/-10 mm;
R=470mm
±30° = 400 +20/-10 mm
R= 890 mm
-2°
55
Fixe Stabilizer
1440
-30°
+15°
+45° = 65 +10/-10 mm
-30° = 135 +10/-10 mm
R= 260mm
0°
R1
6180
11mm
7mm
R15
R25
BP
15 950
BK-Schlitz min. 20mm

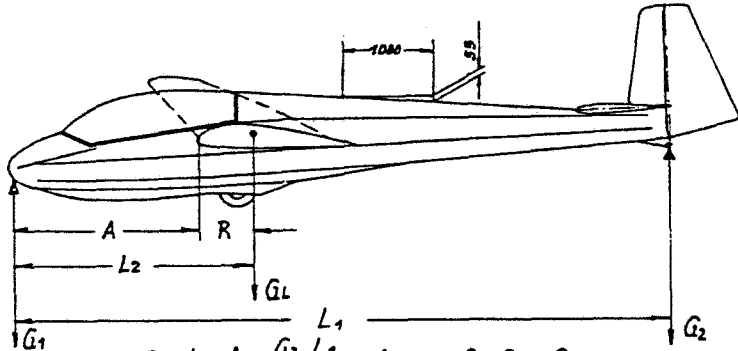

$$R = L_2 - A = \frac{G_2 L_1}{G_L} - A \qquad G_1 + G_2 = G_L$$

G_L = Leergewicht; empty weight.
G_1 = Gewicht am vorderen Auflagepunkt. weight at the front support.
G_2 = Spomgewicht; weight at tail skid.
R = Schwerpunktrücklage. center of gravity position.

G_L = Leergewicht; empty weight	280	290	300	310	320	kp
R { Vorderste Schwerpunktlage; most forward position of C.of.Gr. empty min.	490	475	462	449	437	mm
R { Hinterste Schwerpunktlage; most rearward position of C.of.Gr. empty max.	545	535	525	516	508	mm

Semiaerobatics:

Besides spins the following aerobatic maneuvres may be executed:

Loops

Stall turns

Lazy eights

Loop: Speed of entry 90 to 100 mph. (78-87 kts)

Stall turn: Speed of entry 100 to 110 mph. (87 to 95 kts) During climb at approx. 60 mph (52 kt) there has to be applied full rudder and slightly opposite aileron.

Lazy eight: Speed at the crossing point 90 to 100 mph. (87 to 95 kts)

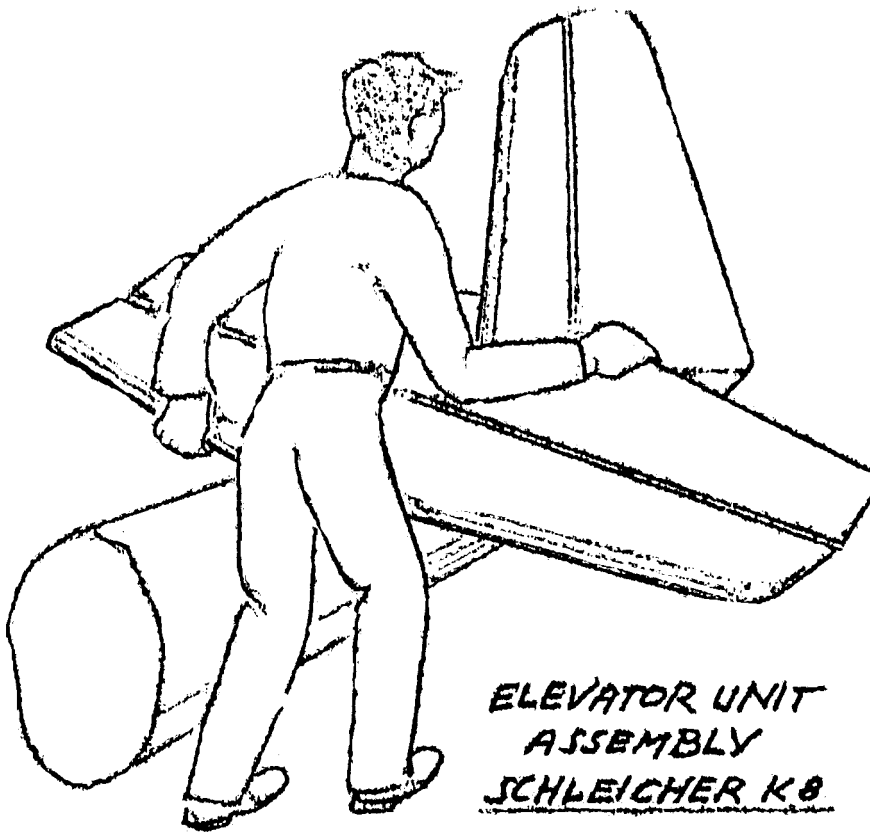

ELEVATOR UNIT
ASSEMBLY
SCHLEICHER K8

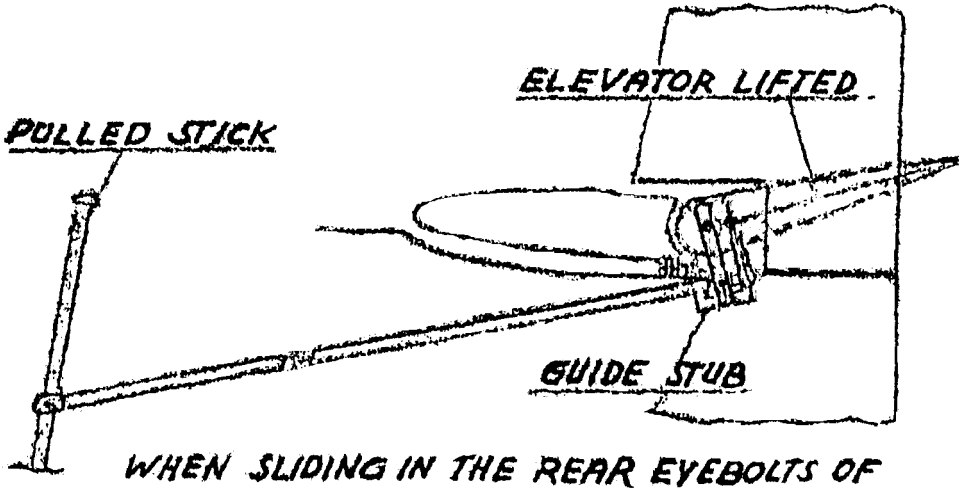

WHEN SLIDING IN THE REAR EYEBOLTS OF THE STABILIZER IT IS ADVISABLE TO LIFT THE ELEVATOR SOMEWHAT THE BALL BEARING OF THE ELEVATOR CONTROL LEVER MUST FIT INTO THE GUIDE STUB OF THE PUSH-PULL TUBE TO AVOID THE RISK

Technical Note
for

Alexander Schleicher
GmbH & Co.
Segelflugzeugbau
D-6416 Poppenhausen

Glider model:

Ka 2 u. Ka 2B	TN-No. 11
Ka 6, 6/0, 6B, 6BR, 6CR, 6B-S . .	TN-No. 21
K7	TN-No. 18
K8, K 8B, K 8C	TN-No. 23
K9	TN-No. 1
K11	TN-No. 1
ASK 13	TN-No. 12
ASK 18, ASK 18B	TN-No. 6

Serial number applicability:

Ka 2,	Data-Sheet No. 140,	all serial no.s
Ka 2B,	Data-Sheet No. 203,	all serial no.s
Ka 6,	Data-Sheet No. 205,	all serial no.s
Ka 6/0,	Data-Sheet No. 205,	all serial no.s
Ka 6B,	Data-Sheet No. 205,	all serial no.s
Ka 6BR,	Data-Sheet No. 205,	all serial no.s
Ka 6CR,	Data-Sheet No. 205,	all serial no.s
Ka 6BS,	Data-Sheet No. 205a,	serial no. E1
K7,	Data-Sheet No. 211,	all serial no.s
K8,	Data-Sheet No. 216,	all serial no.s
K8B,	Data-Sheet No. 216,	all serial no.s
K8C,	Data-Sheet No. 216,	all serial no.s
K9,	Data-Sheet No. 221,	serial no. 1
K11,	Data-Sheet No. 668,	serial no. V1
ASK 13,	Data-Sheet No. 267,	all serial no.s
ASK 18,	Data-Sheet No. 307,	all serial no.s
ASK 18B,	Data-Sheet No. 307,	all serial no.s

Subject: Elevator.

Compliance: Prior to the next take-off.

Reason: A glider of the model K7 failed to gain normal flight attitude immediately after tow rope release on winch launch. With the stick full back only the left elevator could be actuated in the correct direction; the right elevator deflected downwards. The reason for this was a loose glue bond at the elevator rib 1 at which the elevator fitting is attached. Similar incidents lead already before to the issue of the LTA 72-7 dated Feb.9,1972.

Action:

1. Remove elevator.
   Check that the glued joint between rib 1 and the leading edge plywood and the elevator spar respectively is in good condition (see Fig.1). Before doing so check whether the LTA 72-7 of Feb.9, 1972 was already previously accomplished (this is not applicable to K9, K11 and ASK 18); if yes then the fabric strip first carefully has to be detached in order to be able to check the glued joint.

AIRWORTHINESS DIRECTIVE

72-7/3 Schleicher

Date of issue:

13. Dez. 1989

Affected Sailplane:

German Type Certificate

No. 140,	Ka 2,	all serial nos.
203,	Ka 2B,	all serial nos.
205,	Ka 6,	all serial nos.
205,	Ka 6/0,	all serial nos.
205,	Ka 6B,	all serial nos.
205,	Ka 6BR,	all serial nos.
205,	Ka 6CR,	all serial nos.
205a,	Ka 6BS,	serial no. E1
211,	K7,	all serial nos.
216,	K8,	all serial nos.
216,	K8B,	all serial nos.
216,	K8C,	all serial nos.
221,	K9,	serial nos. 1
660,	K11,	serial No. V1
267,	ASK 13,	all serial nos.
307,	ASK 18,	all serial nos.
307,	ASK 18B,	all serial nos.

Subject:

Elevator

Reason:

Loose glue joints on rip 1 of the elevator

Action:

In accordance with the respektive Technical Note

Compliance:

Before the next start

Technical publications of the manufacturer:

Alexander Schleicher, Technical Note, October 4, 1989 "Elevator"

Model Ka 2 and Ka 2B . . . . . TN No. 11
Ka 6, 6/0, 6B, 6BR, 6CR, 6B-S . . TN No. 21
K7 . . . . . TN No. 10
K8, K 8B, K 8C . . . . . TN No. 23
K9 . . . . . TN No. 1
K11 . . . . . TN No. 1
ASK 13 . . . . . TN No. 12
ASK 18, ASK 18B . . . . . TN No. 6

which become herewith part of this AD and may be obtained from Messrs.
Alexander Schleicher GmbH & Co. Segelflugzeugbau,
D-6416 Poppenhausen, Wasserkuppe, Federal Republic of Germany

Accomplishment and log book entry:

Action 1 and 3 to be accomplished by a skilled person.
Action 2 to be accomplished by an approved service station.
The accomplishment of this AD must be certified by a licensed inspector in the powered gliders inspection documents and in the log-book.

Note:

This Airworthiness Directive replaces AD-No. 72-7/2 of August 24, 1989.

Technical Note
for
Glider Models as per Sheet 1

Alexander Schleicher
GmbH & Co.
Segelflugzeugbau
D-6416 Poppenhausen

Fig.1

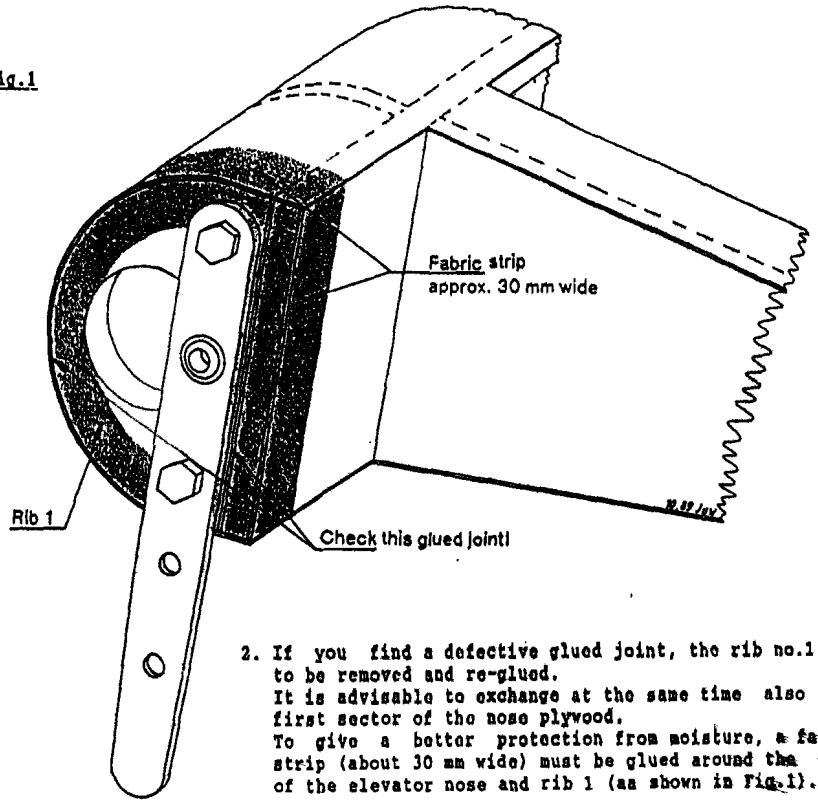

2. If you find a defective glued joint, the rib no.1 has to be removed and re-glued.
   It is advisable to exchange at the same time also the first sector of the nose plywood.
   To give a better protection from moisture, a fabric strip (about 30 mm wide) must be glued around the edge of the elevator nose and rib 1 (as shown in Fig.1).

3. The above action under points 1. and 2. must be repeated every three years during the annual re-inspection. This copy of the Technical Note must be inserted in the Flight and Operations Manual of the respective glider as an annex and a corresponding entry must be made into the "Amendments to the Manual".

Material & drawings:

Rib 1 made from multi-plywood, 15 m thick, and nose plywood, 1 mm thick, according to DIN L 182/183, class 1/2 or NL 9128, 6.1013. Drawing as above.

Mass and C.G.:

It is not necessary to redetermine the mass and C.G. data.

Technical Note
for
Glider Models as per Sheet 1

Alexander Schleicher
GmbH & Co.
Segelflugzeugbau
D-6416 Poppenhausen

Notes:

Actions 1. and 3. can be accomplished by a person who is familiar with such work.
Action 2. must only be accomplished by a technical aviation service station holding an appropriate license; the accomplishment of all actions must be certified by a licensed aviation inspector in the glider logbook and in the inspection certificates.

Poppenhausen, October 4, 1989

ALEXANDER SCHLEICHER
GmbH & Co.

i.A. L.-W. Jumtow.

The German original of this Technical Note has been approved by the LBA under the date of Oct.17, 1989 (signature: FRIESS). The translation into English has been done by best knowledge and judgement; in any case of doubt the German original is controlling.

ASK 13
Technical Note
No. 14

Alexander Schleicher
GmbH & Co.
Segelflugzeugbau
D-6416 Poppenhausen

Subject: Inspecting the bearing brackets and the toggle force of the airbrake control circuit.

Serial number applicability: Glider ASK 13, Data Sheet no.267.
A) Serial no.s 13000 thru 13689 including;
B) All serial no.s.

Compliance:
A) The action must accomplished with the next annual C. of A. inspection, but before or on March 31, 1992, at the latest.
B) The action must become part of each future annual C. of A. inspection.

Reason: On some gliders of the model ASK 13 the bearing brackets of the airbrake control circuit have broken at the wing root rib. The failure was caused by too high toggle forces which resulted from a wrong adjustment of the toggle in the airbrake control circuit.

Action:

1. Carefully inspect the bearing brackets of the airbrake control circuit at the wing root ribs as well as the root ribs themselves for damage, cracks etc. In case of doubt the paint must be removed off the bracket. In most cases the breaks were found at the bottom of the front bearing bracket; refer to the drawing on Sheet 2 of this TN !
Where damages at one bearing bracket are found, this part must be exchanged; where a root rib is damaged, it requires repair.

2. Check the toggle force as described under Point 3.) and where necessary adjust.

3. Adjustment Instructions For Airbrake Toggle

3.1 Undo the airbrake return spring at the front operating lever in the cockpit.

3.2 The airbrake toggle - each side separately - must be adjusted such that a force of approx. 3 to 4 daN is obtained at the front airbrake operating lever when measured from above (measurement distance from the pivot point of the operating lever towards the hand grip = 300 mm).

3.3 Adjustment of the toggle force is done by turning in or out the adjusting heads in the fuselage. If the correct adjustment values cannot be achieved here, the thickness of the airbrake stop blocks inside the wings must either be increased or cut back.

ASK 13
Technical Note
No. 14

Alexander Schleicher
GmbH & Co.
Segelflugzeugbau
D-6416 Poppenhausen

3.4 Take care that the toggle must not go over the dead point which would cause the airbrakes to extend again.

3.5 For both airbrakes together, the hand forces must not exceed approx. 6 daN, when measured at the front airbrake operating lever from above.

3.6 Re-fit the airbrake return spring at the front operating lever in the cockpit.

4. This Technical Note must be inserted as appendix into the ASK 13 Flight and Maintenance Manual and this action must be entered into the "Amendments" on page 2.

5. The inspection of the bearing brackets and of the toggle force of the airbrake control circuit (as described under points 1. thru 3.) must be included from now on within each annual C. of A. inspection.

<u>Material & drawings:</u>

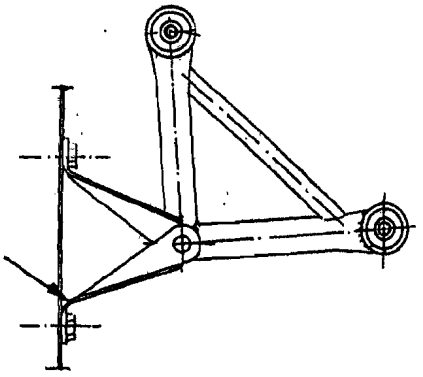

<u>Notes:</u>

The actions under Point 1.) thru 3.) can be accomplished by any competent person. The accomplishment of this mod must be certified by a licensed aviation inspector in the glider`s inspection documents and in the log-book.
The action under Point 4.) can be accomplished by the owner / operator of the glider himself.

Poppenhausen, September 27, 1991

ALEXANDER SCHLEICHER
GmbH & Co.
i.A. Lutz-Werner Jumtow.

The German original of this Technical Note has been approved by the LBA under the date of October 10, 1991 (signature: SKOV). The translation into English has been done by best knowledge and judgement; in any case of doubt the German original is controlling.